PARTS LIST

“S” and “SX” MODELS

SENTRY® CAST-IRON GAS BOILERS

Hot Water Models

ITEM NO.	DESCRIPTION	MODEL NUMBER S-34	S-60	S-90	S-120	S-150	SX-150	SX-180	SX-210
1	Jacket Assembly	460342	460343	460344	460345	460346	460356	460357	460358
1A	Jacket Top	460157	460003	460004	460005	460006	—	—	—
2	Gas Manifold	440501	440502	440503	440504	440505	440505	440506	440507
3	Main Burner Orifice:								
	(sea level)								
	Natural Gas	440550	440551	440551	440551	440551	440551	440551	440551
	LP Propane Gas	411870	440553	440553	440553	440553	440553	440553	440553
4	Main Burner	440539	440539	440539	440539	440539	440539	440539	440539
4A	Main Burner w/Bkt.	440540	440540	440540	440540	440540	440540	440540	440540
5	Burner Clip	410509	410509	410509	410509	410509	410509	410509	410509
6	Gas Valve: *								
	Natural Gas	460510	460510	460510	460510	460510	460510	460550	460550
	LP Propane Gas	460511	460511	460511	460511	460511	460511	460511	460511
7	Thermocouple *	410539	410539	410539	410539	410539	410539	410539	410539
7A	Pilot Tube 1/4" O.D. Alum.	410530	410530	410530	410530	410530	410530	410530	410530
	Tubing Fitting 1/4"	411768	411768	411768	411768	411768	411768	411768	411768
7B	Pilot Assembly: *								
	Natural Gas	411805	411805	411805	411805	411805	411805	411805	411805
	LP Propane Gas	412417	412417	412417	412417	412417	412417	412417	412417
7C	Pilot Orifice:								
	Natural Gas	410542	410542	410542	410542	410542	410542	410542	410542
	LP Propane Gas	410526	410526	410526	410526	410526	410526	410526	410526
7D	Access Door	440027	440028	440029	440030	440031	440031	440032	440026
8	Base Assembly with Insulation	440222	440223	440224	440225	440226	440227	440228	440229
8A	Bottom Burner Mtg. Plate	440111	440112	440113	440114	440115	440115	440116	440110
9	Heat Exchanger Assembly	440006	440007	440008	440009	440010	440010	440011	440012
10	Pipe Nipple 3/4"	460514	460514	460514	460514	460514	902518011	902518011	902518011
11	Relief Valve 30 psi	400103	400103	400103	400103	400103	400103	400103	400103
12	Blank Plug 3/4"	902340051	902340051	902340051	902340051	902340051	902340051	902340051	902340051
13	Immersion Well	410569	410569	410569	410569	410569	410569	410569	410569
14	Machine Screw	930063171	930063171	930063171	930063171	930063171	930063171	930063171	930063171
15	Nut	902702011	902702011	902702011	902702011	902702011	902702011	902702011	902702011
16	Flue Collector/Diverter Assy.	460312	460313	460314	460315	460316	—	—	—
16A	Flue Collector Assembly	—	—	—	—	—	460336	460337	460338
17	Draft Hood	—	—	—	—	—	460538	460539	460539
18	Temperature/Pressure Gauge	910373061	910373061	910373061	910373061	910373061	910373061	910373061	910373061
19	Circulator	7902022	7902022	7902022	7902022	7902022	7902022	7902022	7902022
20	Control, Comb. Limit/Circulator	410538	410538	410538	410538	410538	410538	410538	410538
21	Drain Valve	910460011	910460011	910460011	910460011	910460011	910460011	910460011	910460011
22	Stud	430107	430107	430107	430107	430107	430107	430107	430107
23	Hex Nut	440600	440600	440600	440600	440600	440600	440600	440600
24	Gasket, Circulator Flange	440562	440562	440562	440562	440562	440562	440562	440562
25	Fiberglass Rope	403254	403254	403254	403254	403254	403254	403254	403254
26	Roll Out Safety Switch	411883	440721	440721	460547	460547	460548	460548	460548
27	Blocked Vent Safety Switch	460500	460500	460500	460500	460500	460533	460533	460533
28	Vent Damper	412704	412704	412705	412706	412707	412706	412707	412707

* Standing pilot only. For intermittent ignition, see IID parts list, page 2.

When ordering replacement parts, specify the boiler model number, serial number and gas by name (natural or propane). For replacement parts, heating contractors should contact their Slant/Fin boiler distributor.

PUBLICATION NO. S-10PL
Printed in U.S.A. 904
Part No. 46-0529

Slant/Fin®

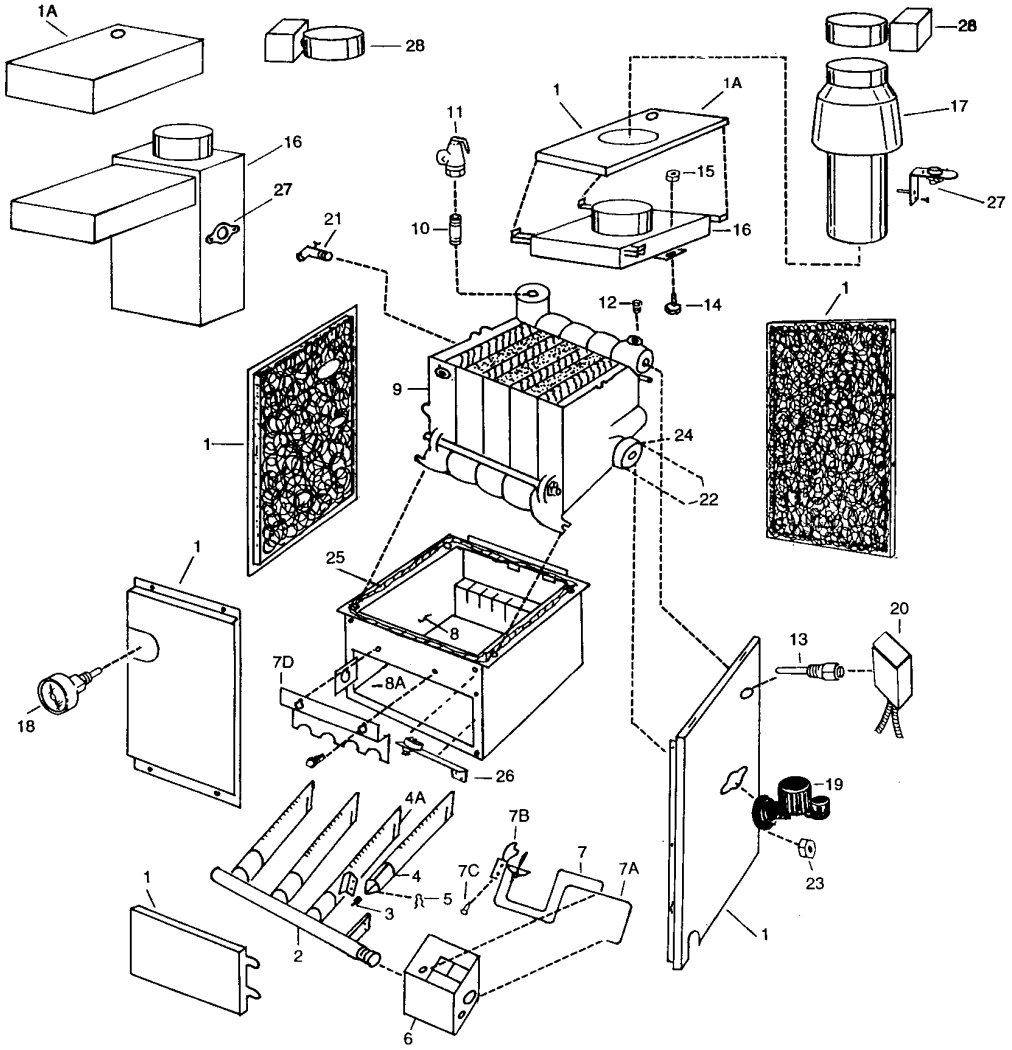

SENTRY SERIES
Intermittent Ignition (IID)
Parts List

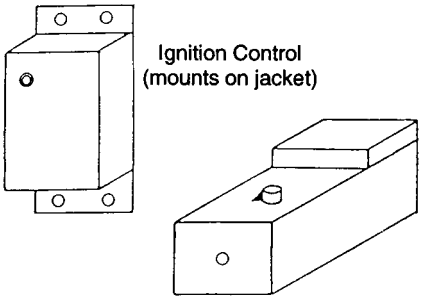

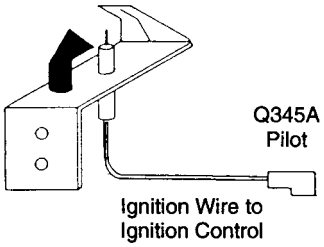

SLANT/FIN HONEYWELL IID CONTROL SYSTEM	PART NO.	APPLICATION
Gas valve - natural gas Honeywell no. VR8204A	440534	All natural gas boiler sizes except model SX-210
Gas valve - natural gas Honeywell no. VR8304M	460552	Model SX-210 only
Gas valve - L.P. propane gas Honeywell no. VR8204A	440535	All propane gas boiler sizes
Ignition control - natural gas only Honeywell no. S8600F-1000	411873	All natural gas boiler sizes
Ignition control - LP propane gas Honeywell no. S8600M-1013	411872	All propane gas boiler sizes
Ignition wire for S8600 series	411874 460531	S-34 thru S-120 S-150 and SX-150 thru SX-210
Electric ignition pilot		
Honeywell Q345A - natural gas	411612	All natural gas boiler sizes
or		
*Honeywell Q3451B - natural gas	412075	All natural gas boiler sizes
Honeywell Q345A - propane gas	411857	All propane gas boiler sizes
or		
*Honeywell Q3451B - propane gas	412067	All propane gas boiler sizes
Pilot orifice		
Natural gas only410542		All natural gas boiler sizes
Propane gas only	410526	All propane gas boiler sizes

©Slant/Fin Corp. 1996.

* Includes ignition wire

Slant/Fin®

SLANT/FIN CORPORATION, Greenvale, N.Y. 11548 • Phone: (516) 484-2600
FAX: (516) 484-5921 • *Canada: Slant/Fin LTD/LTEE, Mississauga, Ontario*

www.slantfin.com